FISHER & PAYKEL

612L SERIES 7
FRENCH DOOR
REFRIGERATOR FREEZER

27068-A RF600ADX1

SPARE PART GUIDE

AA

INTRODUCTION

Voltage

220 –240 50Hz

Kit parts

Where a part number is shown against the descriptions for kit components, they are also available as separate items. In addition, some parts may be supplied with these kits that are not available as separate items, and are therefore either not listed, or a part number is not shown against the part description in this guide.

Part list key

You may see one or more 'keys' in the first column of the part list tables, see below for explanations:

NI	Indicates the part is not illustrated in the diagram.
NOT USED	Indicates the diagram part is not used in this manual.
NS	Indicates the part is not servicable.
NM	Not available for this model.

For more information about our products and services, and for detailed contact information, visit our website:

NZ https://www.fisherpaykel.co.nz
AU https://www.fisherpaykel.com.au

CONTENTS

DOOR COMPONENTS 3

INTERNAL CABINET COMPONENTS 7

EXTERNAL COMPONENTS 9

DOOR SHELVES COMPONENTS

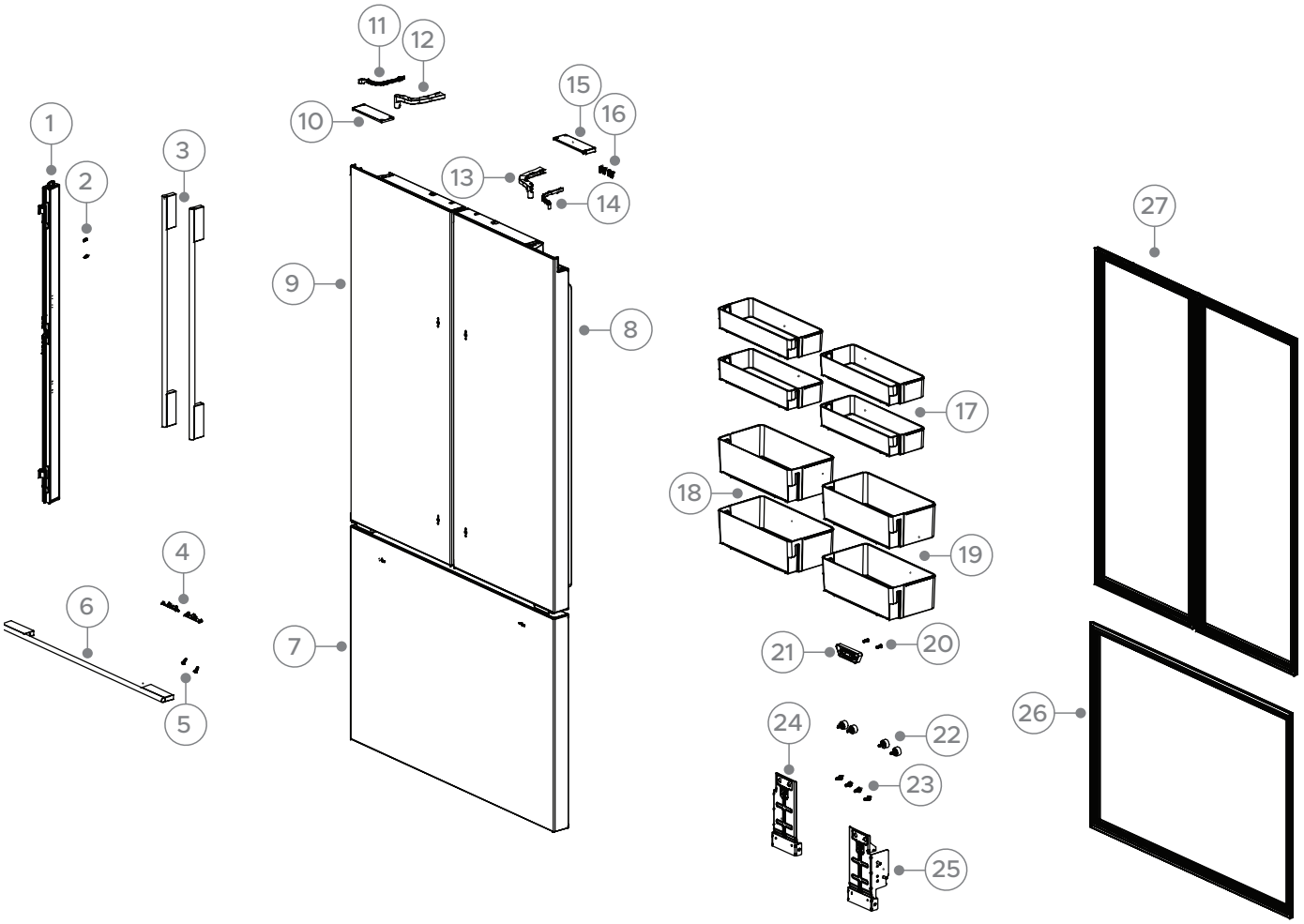

DWG 007611

DOOR SHELVES COMPONENTS

REF	PART NUMBER	PART DESCRIPTION
1	H0060888797	FLAPPER ASSY SS
2	H0060801021	SCREW
3	H0060888793	HANDLE ASSY SS
4	H0060858426A	LAMP FREEZER
5	H0262990018	SCREW SHEET METAL
6	H0060888795	HANDLE FREEZER SS
7	H0060888700	DOOR FREEZER SS
8	H0060888699	DOOR RH REF SS
9	H0060888697B	DOOR LH REF SS
10	H0060271798	COVER HINGE DOOR LEFT SS
11	H0060272006	COVER LOWER LH ARM SERVICE SS
12	H0060271863	COVER UPPER LH ARM SERVICE SS
13	H0060272670	COVER UPPER RH ARM SERVICE SS
14	H0060272669	COVER LOWER RH ARM SERVICE SS
15	H0060271799	COVER HINGE DOOR RIGHT SS
16	H0064082855	SCREW CROSS GROOVE SELF ATTACH
17	H0060266234	SHELF DOOR BM SMALL
18	H0060271789	SHELF DOOR GALLON LH
19	H0060271790	SHELF DOOR GALLON RH
20	H0060600097	SCREW
21	H0060889384	MODULE ASSY MAGNETIC
22	H0060261562A	MOUNT COMPRESSION DRAWER FC
23	H0060802013	SCREW
24	H0060880681	BRACKET RAIL SLIDE LH
25	H0060880682	BRACKET RAIL SLIDE RH
26	H0060874748DJ	GASKET DOOR FRZ SS
27	H0060874748DG	GASKET DOOR REF SS

INTERNAL CABINET COMPONENTS

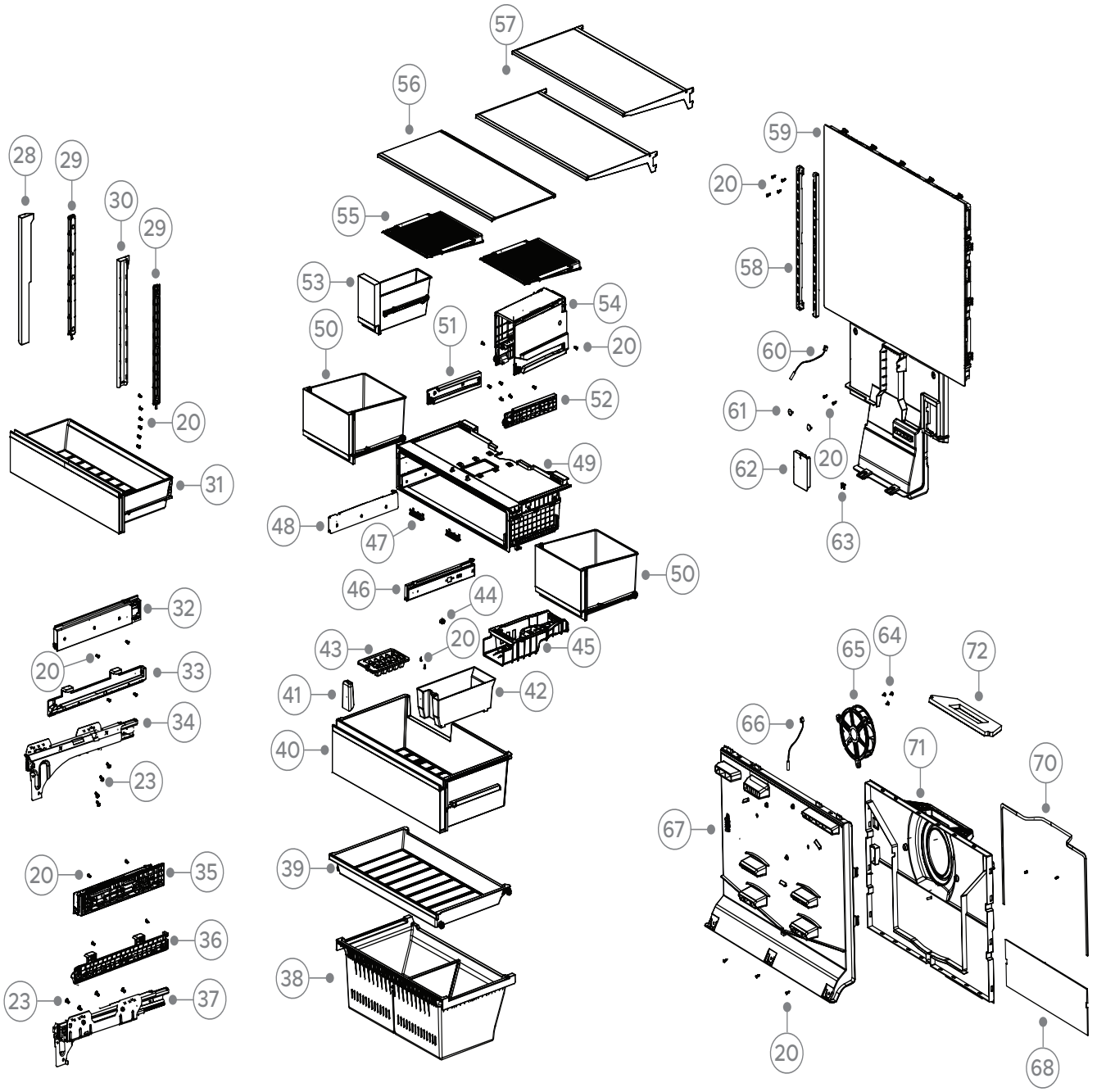

DWG 007612

INTERNAL CABINET COMPONENTS

REF	PART NUMBER	PART DESCRIPTION
28	H0060271841	TRIM LINER LH BIN LOWER
29	H0060271832	RETAINER BIN LOWER INNER
30	H0060271842	TRIM LINER RH BIN LOWER
31	H0060889385	BIN LOWER PC
32	H0060867245B	SLIDE RAIL LH ASSY
33	H0060889382	MOUNT TRAY MID FC LH REF
34	H0060852558L	SLIDE RAIL LH LOWER FC ASSY
35	H0060867246B	SLIDE RAIL RH ASSY
36	H0060889383	MOUNT TRAY MID FC RH REF
37	H0060852559L	SLIDE RAIL RH LOWER FC ASSY
38	H0060889388	BIN LOWER FC
39	H0060889381	TRAY MID FC
40	H0060889216	BIN TOP FC
41	H0060235014	SCOOP ICE
42	H0060271938	BIN ICE
43	H0060875341	ICE TRAY MANUAL
44	H0060232656	MOUNT ICETRAY MANUAL
45	H0060272182	HOUSING ICETRAY MANUAL
46	H0060846936B	SLIDE PC RH
47	H0060888653	LIGHT DISPLAY IW
48	H0060846935B	SLIDE PC LH
49	H0060889386	HOUSING DRAWER PC
50	H0060886578A	BIN SMALL PC
51	H0060888813	TRACK ROLLER REF LH ASSY
52	H0060888814	TRACK ROLLER REF RH ASSY
53	H0060889387	BIN VEGE PC
54	H0060890146	HOUSING BIN MINI
55	H0060269046	LID HUMIDITY CONTROL
56	H0060886575B	SHELF FIXED ASSY
57	H0060889180	RACK CANTILEVER ASSY
58	H0060129138	RAIL CANTILEVER
59	H0060889358	DUCT PC AIR REF ASSY
60	H0060401425D	SENSOR FRIDGE

INTERNAL CABINET COMPONENTS

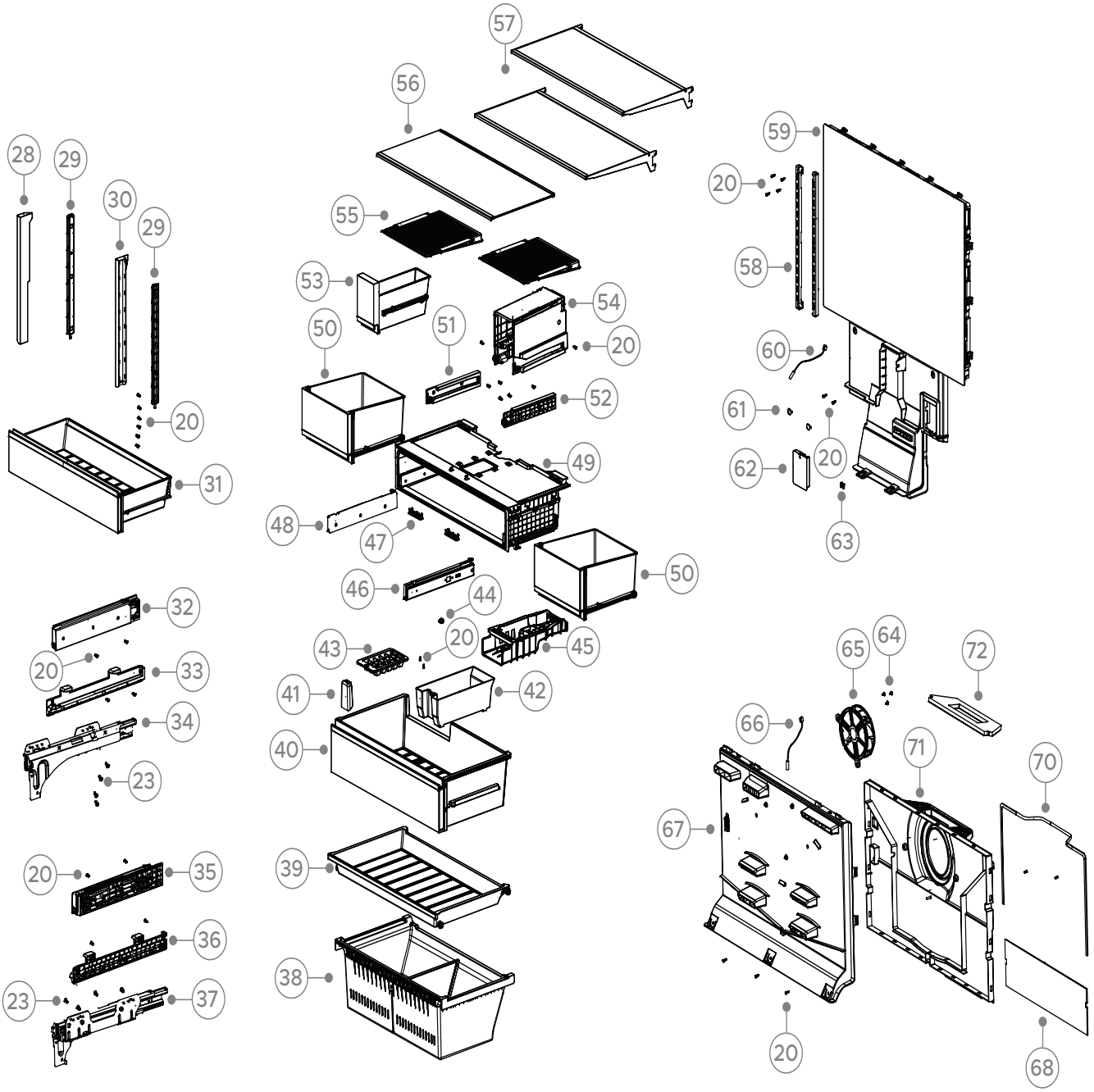

DWG 007612

INTERNAL CABINET COMPONENTS

REF	PART NUMBER	PART DESCRIPTION
61	H00602160304	CAP SCREW
62	H0060235282	COVER HARNESS AIR DUCT
63	H0060600121	SCREW
64	H0060600002	SCREW
65	H00640021615	FAN COMPACT REF
66	H0060401766	SENSOR (INCLUDES CABLE)
67	H0060271792	COVER DUCT FC FRONT
68	H0060318180	INSULATION DUCT FOAM
69	H0060802008	SCREW
70	H0060305050	STRIP FOAM
71	H0060271793	COVER BACK FC DUCT AIR
72	H0060318701	SEAL PC DELIVERY

EXTERNAL COMPONENTS

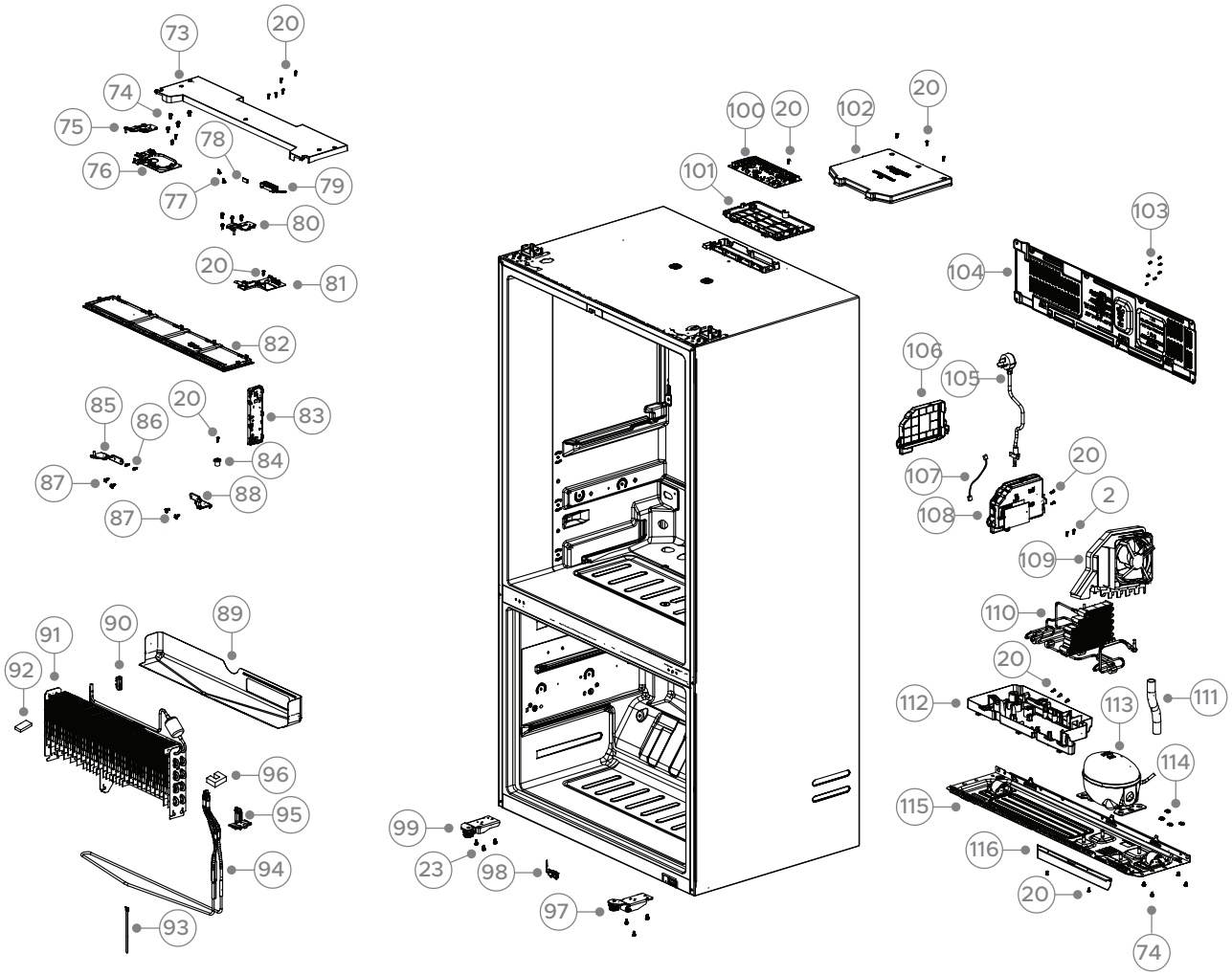

DWG 007613

EXTERNAL COMPONENTS

REF	PART NUMBER	PART DESCRIPTION
73	H0060271809	COVER HINGE SS
74	H0060600251	SCREW
75	H0060139284	HINGE LH UPPER
76	H0060271807	GUIDE CABLE HINGE LH UPPER SS
77	H0064001332A	SENSOR DOOR PC
78	H0064002683	SENSOR HUMIDITY
79	H0061801208	MODULAR WIFI
80	H0060139285	HINGE RH UPPER
81	H0060272007	GUIDE CABLE HINGE RH UPPER SS
82	H0064003283A	LIGHT CEILING PANEL
83	H0060887919A	BOARD DISPLAY
84	H0060245123	MOUNT CENTER HOUSING PC
85	H0060136812A	HINGE CENTRE LH
86	H0064082808	SCREW
87	H0060600429A	SCREW MID HINGE
88	H0060136812	HINGE CENTRE RH
89	H0060135112A	SHIELD DRAIN FC
90	H0060264623	SENSOR DEFROST
91	H0060708631	EVAPORATOR
92	H0060313178A	BLOCK PE
93	H0060707720	STRIP CONDUCTION HEAT
94	H0064001579E	HEATER DEFROST
95	H0060272237	CLIP DEFROST WIRE
96	H0060313179	BLOCK PE FC RH
97	H0060890337	BASE FOOT RH
98	H0064000326A	SWITCH PLUNGER FC
99	H0060890340	BASE FOOT LH
100	H0061801504X	BOARD CONTROL MAIN DRY
101	H0060271092	BRACKET CONTROL BOARD MAIN
102	H0060271093	LID CONTROL BOARD MAIN
103	H0064098059	SCREW
104	H0060888428	COVER COMP
105	H0060401749AH	CABLE POWER AU/NZ
106	H0060268776	COVER TRANSFORMER
107	H0060405913	HARNESS POWER DRY

EXTERNAL COMPONENTS

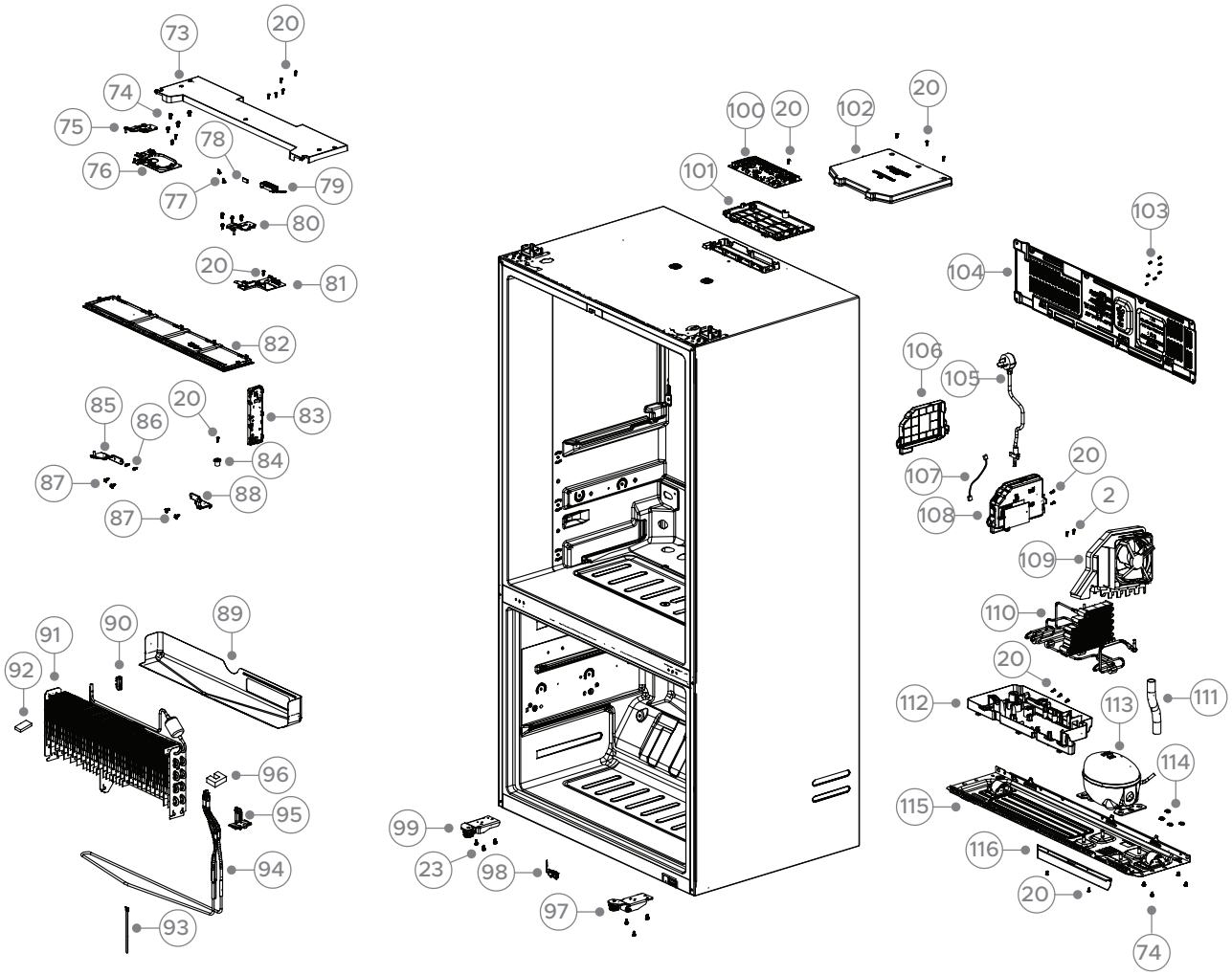

DWG 007613

EXTERNAL COMPONENTS

REF	PART NUMBER	PART DESCRIPTION
108	H0061801560B	MODULE POWER INVERTER DRY
109	H0060888266A	FAN COND ASSY
110	H0060707653C	CONDENSER MICROCHANNEL
111	H0060229679M	TUBE DRAIN
112	H0060270387	TRAY EVAP
113	H0060708616	COMPRESSOR
114	H0060112284	FIXING CLAMP
115	H0060888427	TRAY COMP 905
116	H0060250790K	SEAL AIR DIVIDER FLOOR

FISHERPAYKEL.COM

© Fisher & Paykel Appliances 2026. All rights reserved.

The models shown in this guide may not be available in all markets and are subject to change at any time.

The product specifications in this guide apply to the specific products and models described at the date of issue. Under our policy of continuous product improvement, these specifications may change at any time.

For current details about model and specification availability in your country, please go to our website or contact your local Fisher & Paykel dealer.

27068-A 10.26